STEEL CYLINDERS

NSHS & NRHS SERIES

CAPACITY: 10 - 100 Ton

STROKE: 8 - 160 mm

MAX. WORKING PRESSURE: 700 bar/ 10,000 psi

FEATURES

- All cylinders are single acting with spring return.
- Pistons hard chromed.
- Cylinders inside roll-polished.
- Cylinders outside blasted with black nitriding finish.
- Use in combination with hand I foot pumps and accessories

NRHS SERIES

- Get the fast retracting speed by Tension spring design.
- Enlarged Plunger size provide stronger gripping force.

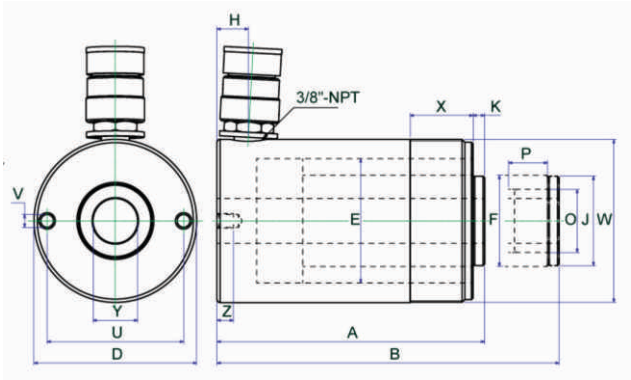

SPECIFICATIONS

Model No.	Capacity (ton)	Stroke (mm)	Cylinder Effective Area (cm^2)	Oil Capacity (cm^3)	A Height (mm) Retracted	B Height (mm) Extended	D ø mm	E ø mm	F ø mm	H ø mm	J ø mm	K ø mm	O ø UN	P ø mm	U ø mm	V ø UNC	Z ø mm	W ø UN	X ø mm	Y Centre Hole ø mm	Weight (kgs)
NSHS120	12	8	18.5	14.8	60	68	73	54	35	12.5	-	-	¾"-16	16	50.8	5/16"-18	9	2¾"-16	33	19.5	1.8
NSHS121		42	18.9	79	120	162		55		19			-	-			12.7				3.1
NSHS1211		42	18.9	79	120	162		55		19			¾"-16	16			12.7				3.1
NSHS123		76	18.9	143.2	184	260		55		19			-	-			12.7				4.5
NSHS202	20	51	34	173	162	213	98.5	75	55	19	54	7	1 9/16"-16	25	82.6	⅜"-16	9.4	3 7/8"-12	38	27	7.5
NSHS206		155	34	527	306	461															13.5
NSHS302	30	65	47.8	310	178.5	243.5	117	90	65	21.5	59.9	0.5	1 7/8"-16	25	92	⅜"-16	14	4½"-12	42	34	20.4
NSHS306		160	47.8	763	330	490															20.4
NSHS603	60	76	89.6	680	247.5	323.5	158.6	125	90	32	89	12.5	2¾"-16	25	130	½"-13	14	6¼"-12	50	54	26.8
NSHS606		152	89.6	1360	323.5	475.5															34
NSHS1003	100	76	143	1085	254	330	213	165	125	38	125	12	4"-16	30	178	⅝"-11	19	8⅜"-12	60	79	50.1
NRHS102	10	63.5	14.9	42.6	135.5	199	76.2	60	52.4	25.4	52	0.5	1¾"-12	15	60.3	¼"-20UNC	10	-	-	19.5	4
NRHS108		203	14.9	302.3	287.5	490.5															8.5
NRHS302	30	63.5	42.7	271	158.5	222	121	95	79.9	30	79.5	1.5	2¾"-12	20	95.3	7/16"-20UNF	14	4¾"-20UN	38	33.3	11.4
NRHS306		152.5	42.7	651	247.5	400															11.4